# 3.1 JEDNOSTUPANJSKA OGRANIČENJA

## IZMJENIČNA POJAČALA STATIKA

| Spoj pojačala | SZE | SZB | SZC |
|---|---|---|---|
| $A_V$ | $-g_m(R_C \parallel R_T)$ 10 – 100 | $g_m(R_C \parallel R_T)$ 10 – 100 | $\frac{g_m(R_E \parallel R_T)}{1+g_m(R_E \parallel R_T)}$ $\approx 1$, $<1$ |
| $A_I$ | $-h_{fe}\frac{R_C}{R_C+R_T}\frac{R_B}{R_B+r_{be}}$ 10 – 100 | $\frac{h_{fe}}{1+h_{fe}}\frac{R_C}{R_C+R_T}\frac{R_E}{R_E+\frac{r_{be}}{1+h_{fe}}}$ $<1$ | $(1+h_{fe})\frac{R_E}{R_E+R_T}\frac{R_B}{R_B+r_{be}+(1+h_{fe})(R_E \parallel R_T)}$ 10 – 100 |
| $R_{ul}$ | $R_B \parallel R_T$ $\sim k\Omega$ | $R_E \parallel \frac{r_{be}}{1+h_{fe}}$ $\sim 10\,\Omega$ | $R_B \parallel [r_{be}+(1+h_{fe})(R_E \parallel R_T)]$ $\sim 10\,k\Omega$ |
| $R_{iz}$ | $R_C$ $\sim k\Omega$ | $R_C$ $\sim 10\,\Omega$ | $R_E \parallel \frac{R_g \parallel R_B + r_{be}}{1+h_{fe}}$ $\sim 10\,\Omega$ |

Nap. poj: $A_V \uparrow\uparrow$ $R_{ul} \uparrow$ $R_{iz} \downarrow\downarrow$ → spajamo stupnjeve multiplicirano da bismo dobili najbolje

**Princip kaskadiranja** na izlaz jednog pojačala spajamo ulaz drugog pojačala

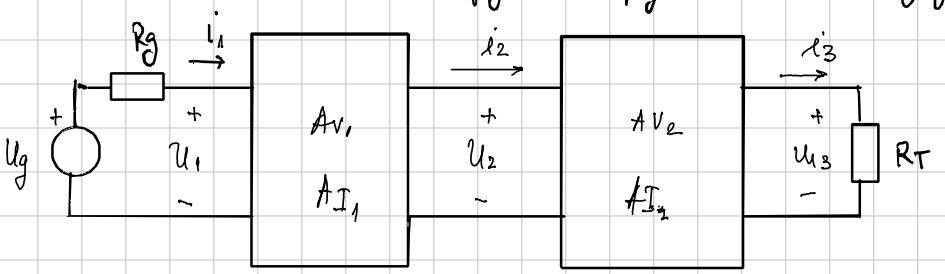


$$A_V = \frac{U_3}{U_1} = \frac{U_3}{U_2}\cdot\frac{U_2}{U_1} = A_{V2}\cdot A_{V1}$$

$$A_I = \frac{i_3}{i_1} = \frac{i_3}{i_2}\cdot\frac{i_2}{i_1} = A_{I2}\cdot A_{I1}$$

OPĆENITO:

$$A_V = A_{Vn}\,A_{Vn-1}\,L \qquad A_I = A_{In}\,A_{In-1}\,L$$

$$A_{V2}\,A_{V1} = \prod_{k=1}^{n} A_{Vk} \qquad A_{I2}\,A_{I1} = \prod_{k=1}^{n} A_{Ik}$$

# Izmjenično pojačalo:

preuzima razliku napona kako bi pokrio struje

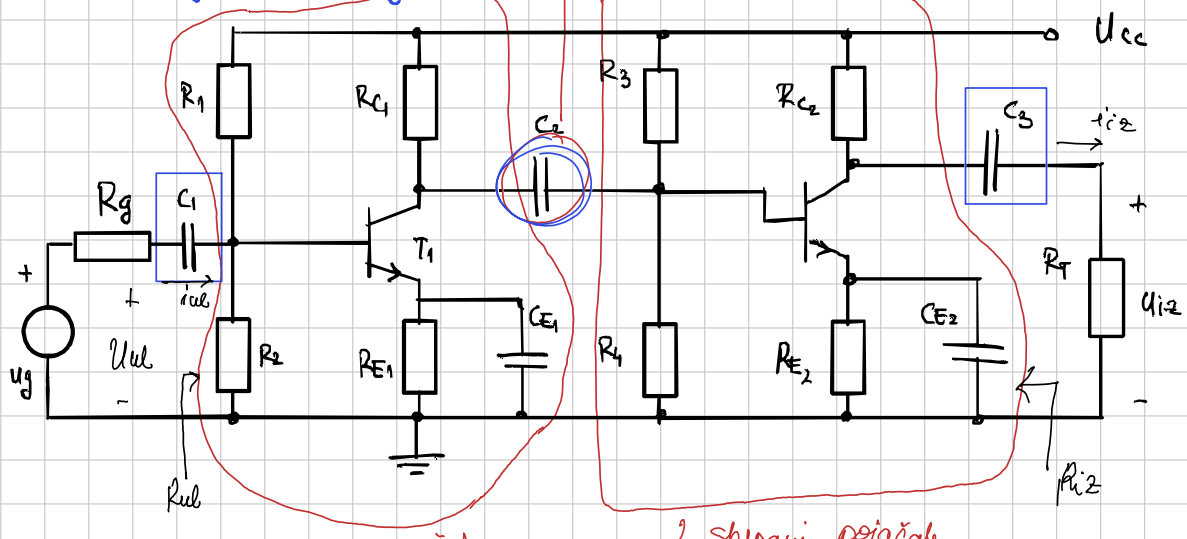


1. stupanj pojačala

2. stupanj pojačala

$C_2$ → prijenos izmjeničnog bloka idosmjernog

ista stvar na $C_1$ i $C_3$ } stupnjevi povezani vezivnim kondenzatorima

## Statika

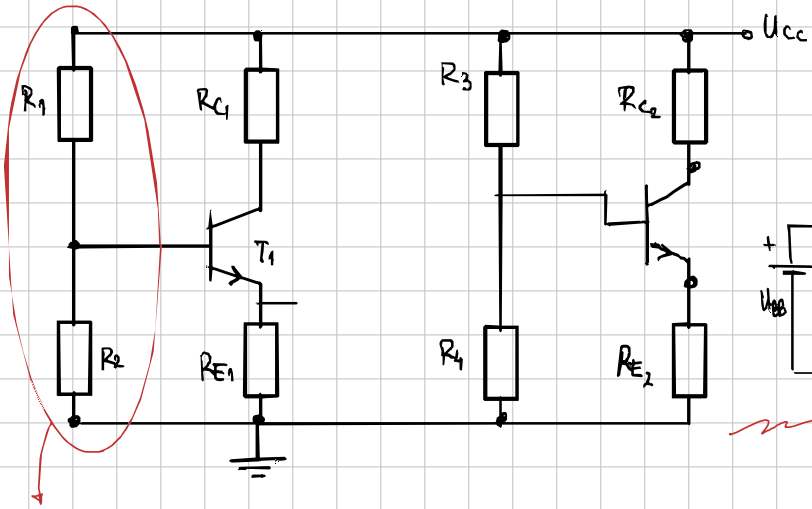


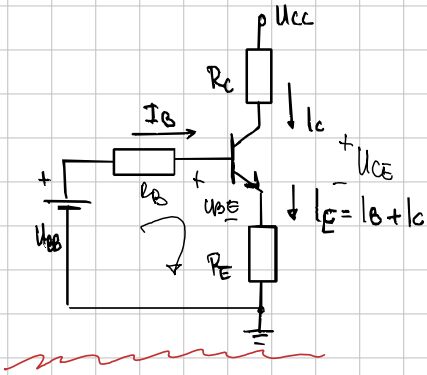


$$U_{BB} = U_{CC} \cdot \frac{R_2}{R_1 + R_2}$$

$$R_B = R_1 \parallel R_2$$

$$I_C = \beta \cdot I_B$$

$$U_{BB} = I_B \cdot R_B + U_{BE} + I_E \cdot R_E$$

$$= I_B \cdot R_B + U_{BE} + (I_B + I_C) R_E$$

$$U_{BB} = I_B \cdot R_B + U_{BE} + I_B (1+\beta) R_E$$

$$I_B = \frac{U_{BB} - U_{BE}}{R_B + R_E (1+\beta)}$$

$$0 = -U_{CC} + I_C \cdot R_C + U_{CE} + I_C (R_E)$$

$$\rightarrow U_{CE} = U_{CC} - I_C (R_C + R_E)$$

$U_{CE} > U_{BE}$ → NAP

potpuno ekvivalentni postupak ide i za 2. stupanj samo $U_{BB_2}$ itd (2 u indeksu)

# Primjer 3.1

$U_{CC} = 15V$ $\quad R_g = 500\Omega$ $\quad R_T = 5k\Omega$ $\quad \beta = 100$ $\quad U_\gamma = 0{,}7V$ $\quad U_\gamma \parallel U_{BEQ}$

$R_1 = 300k\Omega$ $\quad R_3 = 160k\Omega$ $\quad I_{BQ}, I_{CQ} = ?$

$R_2 = 50k\Omega$ $\quad R_4 = 40k\Omega$ $\quad U_{CEQ} = ?$

$R_{C_1} = 8k\Omega$ $\quad R_{C_2} = 5k\Omega$

$R_{E_1} = 1k\Omega$ $\quad R_{E_2} = 1{,}5k\Omega$

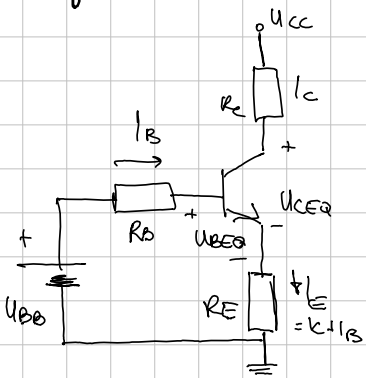


$$U_{BB_1} = \frac{R_2}{R_1+R_2} \cdot U_{CC}, \quad R_{B_1} = R_1 \parallel R_2 \qquad U_{BB_2} = \frac{R_4}{R_3+R_4} \cdot U_{CC}, \quad R_{B_2} = R_3 \parallel R_4$$

$U_{BB_1} = 2{,}14V$ $\quad R_{B_1} = 42.86k\Omega$ $\quad U_{BB_2} = 3V$ $\quad R_{B_2} = 32k\Omega$

$$-U_{BB} + I_B \cdot R_B + U_{BEQ} + I_B(1+\beta)R_E = 0 \rightarrow I_B = \frac{U_{BB} - U_{BEQ}}{R_B + (1+\beta)R_E}, \quad I_C = \beta \cdot I_B$$

$$-U_{CC} + I_C \cdot R_C + U_{CEQ} + I_C R_E = 0$$

$$\rightarrow U_{CEQ} = U_{CC} - I_C(R_C + R_E)$$

| | |
|---|---|
| $I_{B_1} = 10\mu A$ | $I_{B_2} = 12.53\mu A$ |
| $I_{C_1} = 1mA$ | $I_{C_2} = 1.253mA$ |
| $U_{CEQ_1} = 6V > U_{BEQ}$ ✓ NAP | $U_{CEQ_2} = 8.5V > U_{BEQ}$ NAP ✓ |